SPECIFICATION

A: MATERIAL:
- 1.BODY: NYLON 66
- 2.TERMINAL Cu PLATED Sn
- 3.PIN: Cu PLATED Ni

B: CHARACTERISTICS:
- 1.RATING: 2.5A 250V~(C-ULus, ENEC & CCC & KC)
- 2.INSULATION RESISTANCE:100MΩ MIN,AT 500VDC
- 3.ELECTRIC STRENGTH : 3000 VAC/1MIN,LEAKAGE CURRENT UNDER 0.5mA

C: APPROVALS: C-ULus, ENEC & CCC

D: MATERIAL USED MUST BE COMPLY WITH HQI-0010

E: CAN MEET ROHS,ROHS2.0,HF

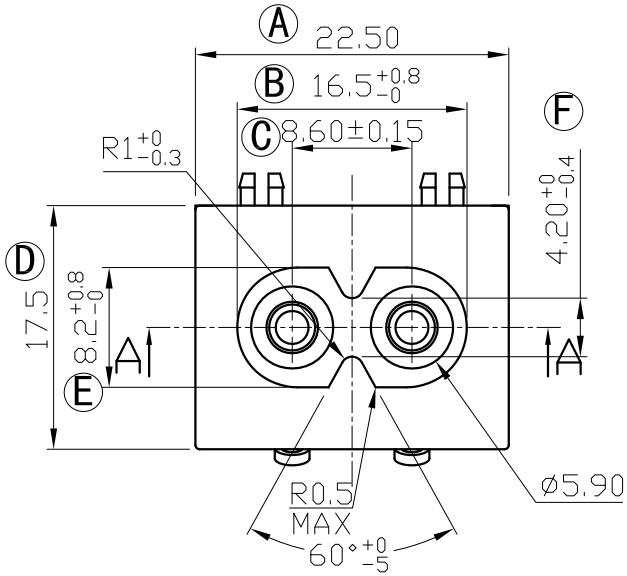

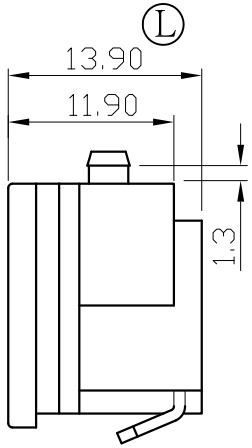

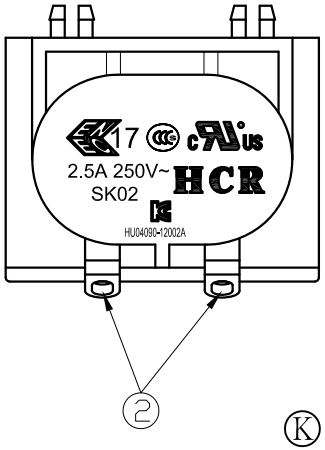

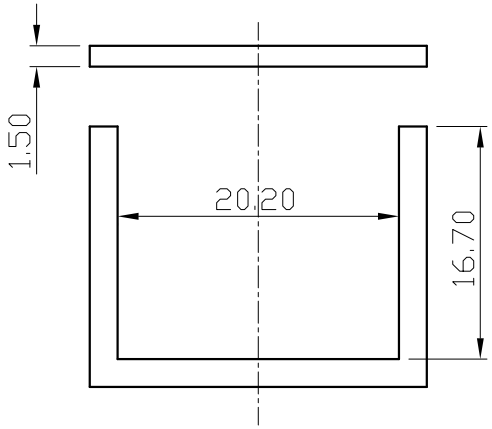

PANEL CUT-OUT

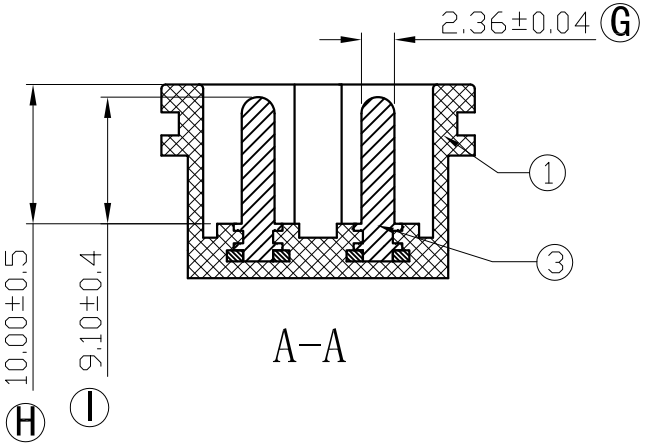

A-A

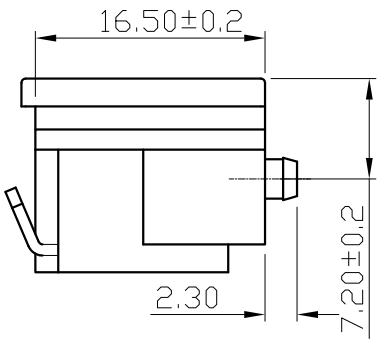

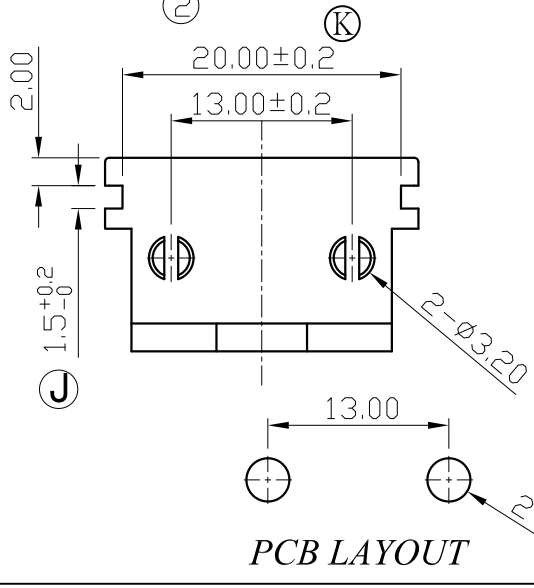

PCB LAYOUT

TOLERANCES UNLESS OTHERWISE 未指定容許差尺寸之公差	
BASIC DIMENSIONS TOLERANCES	
UP TO 10 (10以下)	±0.3
ABOVE 10 TO 100(10~100)	±0.5
ABOVE 100 (100 以上)	±0.8
ANGULAR DIMENSIONS(角度)	±5°
DIMENSION UNIT	mm

東莞市華之力電子有限公司 DONGGUAN HCR ELECTRONICS CO., LTD.

NO	DATE	REVISION DESCRIPTION	REVISION	DRAWN	APPROVED
2					
1					
0	2011/9/10	新制定	A0	WeiChen	AaronJin

核准 APPROVED BY	AaronJin	日期 DATE	20110705	投影法 PROJECT		機型 PART NAME	INLET SOCKET
校對 CHECKED BY	RZTang	日期 DATE	20110705	比例 SCALE	1:1	型號 PART NO	SK02
繪圖 DRAWN BY	WeiChen	日期 DATE	20110705	路徑 DWG NO	E:\成品圖\SK02\820006	料號 ITEM NO	SK02-0401042221H